silver S TW

silver series

architectural lighting requires the right luminaire. Highlighting and accenting with multiple sources rather than just flooding an area with light. The silver S TW has an adjustable specular aluminium reflector and a range of beam angles and washers to create the perfect effect. The range also includes a square trim and trimless options in both square and round trim, and all with the flexibility to adjust the colour temperature between 2700K and 6500K.

specifications

system wattage	8.7W
CCT	tuneable white - 2700K - 6500K
luminaire output	572lm - 679lm
beam angles	16°, 25°, 38°, 55°, wallwash
CRI	90
Macadam	3 SDCM
control	DALI, Casambi
cutout	Ø63mm for 5-25mm ceiling thickness
lifetime	50,000hrs
build	die-cast aluminium & specular aluminium reflector
IP rating	IP20
warranty	5 years
accessories	black or white trim honeycomb filter clear lens frosted diffuser
options	black or white trim square trimless specular, frosted or gold reflector

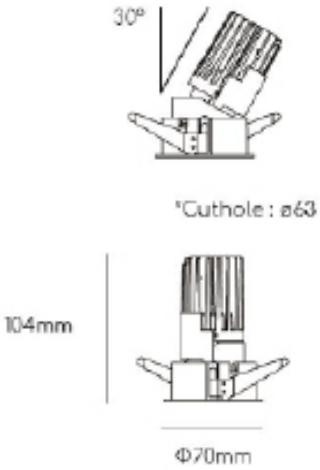

product code

FV	-	SSTW	-	8	-	x	-	x	-	TW	-	x	-	R
product group		group destination		wattage		dimmable		beam angle		cct		fixture colour		mounting

FV	vue	**SSTW**	silver S TW	**8**	8.7W	**D0**	non-dim	**16**	16°	**TW**	tuneable white	**W**	white	**R**	recessed
						D1	1-10V	**25**	25°			**B**	black		
						D2	TRIAC	**38**	38°						
						DD	DALI	**55**	55°						
						CS	Casambi	**WW**	wallwash						

customer service
+61 (03) 9790 8999
verbatimlighting.com.au